- **Very Low Power Consumption**
  − 1 mW Typ at V_{DD} = 5 V
- **Capable of Operation in Astable Mode**
- **CMOS Output Capable of Swinging Rail to Rail**
- **High Output-Current Capability**
  − Sink 100 mA Typ
  − Source 10 mA Typ
- **Output Fully Compatible With CMOS, TTL, and MOS**
- **Low Supply Current Reduces Spikes During Output Transitions**
- **Single-Supply Operation From 2 V to 15 V**
- **Functionally Interchangeable With the NE555; Has Same Pinout**
- **ESD Protection Exceeds 2000 V Per MIL-STD-883C, Method 3015.2**
- **Available in Q-Temp Automotive**
  High Reliability Automotive Applications
  Configuration Control/Print Support
  Qualification to Automotive Standards

D, DB, JG, OR P PACKAGE
(TOP VIEW)

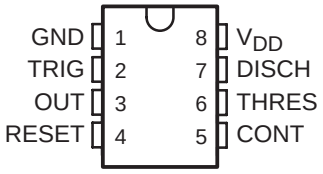

FK PACKAGE
(TOP VIEW)

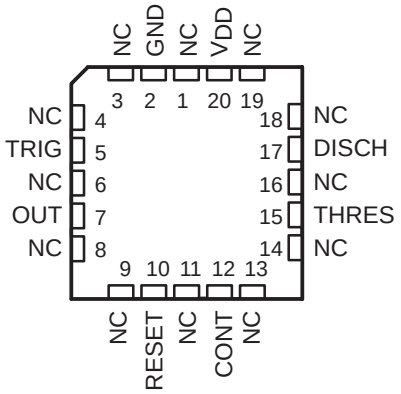

PW PACKAGE
(TOP VIEW)

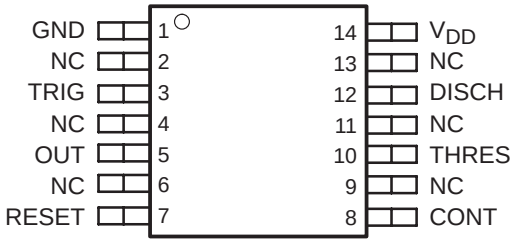

NC − No internal connection

description

The TLC555 is a monolithic timing circuit fabricated using the TI LinCMOS™ process. The timer is fully compatible with CMOS, TTL, and MOS logic and operates at frequencies up to 2 MHz. Because of its high input impedance, this device uses smaller timing capacitors than those used by the NE555. As a result, more accurate time delays and oscillations are possible. Power consumption is low across the full range of power supply voltage.

Like the NE555, the TLC555 has a trigger level equal to approximately one-third of the supply voltage and a threshold level equal to approximately two-thirds of the supply voltage. These levels can be altered by use of the control voltage terminal (CONT). When the trigger input (TRIG) falls below the trigger level, the flip-flop is set and the output goes high. If TRIG is above the trigger level and the threshold input (THRES) is above the threshold level, the flip-flop is reset and the output is low. The reset input (RESET) can override all other inputs and can be used to initiate a new timing cycle. If RESET is low, the flip-flop is reset and the output is low. Whenever the output is low, a low-impedance path is provided between the discharge terminal (DISCH) and GND. All unused inputs should be tied to an appropriate logic level to prevent false triggering.

While the CMOS output is capable of sinking over 100 mA and sourcing over 10 mA, the TLC555 exhibits greatly reduced supply-current spikes during output transitions. This minimizes the need for the large decoupling capacitors required by the NE555.

Please be aware that an important notice concerning availability, standard warranty, and use in critical applications of Texas Instruments semiconductor products and disclaimers thereto appears at the end of this data sheet.

LinCMOS is a trademark of Texas Instruments.

PRODUCTION DATA information is current as of publication date. Products conform to specifications per the terms of Texas Instruments standard warranty. Production processing does not necessarily include testing of all parameters.

Copyright © 1983−2005, Texas Instruments Incorporated

On products compliant to MIL-PRF-38535, all parameters are tested unless otherwise noted. On all other products, production processing does not necessarily include testing of all parameters.

description (continued)

The TLC555C is characterized for operation from 0°C to 70°C. The TLC555I is characterized for operation from −40°C to 85°C. The TLC555Q is characterized for operation over the automotive temperature range of −40°C to 125°C. The TLC555M is characterized for operation over the full military temperature range of −55°C to 125°C.

AVAILABLE OPTIONS†

PACKAGED DEVICES							
T_A	V_{DD} RANGE	SMALL OUTLINE (D)‡	SSOP (DB)‡	CHIP CARRIER (FK)	CERAMIC DIP (JG)	PLASTIC DIP (P)	TSSOP (PW)‡
0°C to 70°C	2 V to 15 V	TLC555CD	TLC555CDB	—	—	TLC555CP	TLC555CPW
−40°C to 85°C	3 V to 15 V	TLC555ID	—	—	—	TLC555IP	—
−40°C to 125°C	5 V to 15 V	TLC555QD	—	—	—	—	—
−55°C to 125°C	5 V to 15 V	TLC555MD	—	TLC555MFK	TLC555MJG	TLC555MP	—

† For the most current package and ordering information, see the Package Option Addendum at the end of this document, or see the TI web site at www.ti.com.
‡ This package is available taped and reeled. Add the R suffix to device type (e.g., TLC555CDR).

FUNCTION TABLE

RESET VOLTAGE‡	TRIGGER VOLTAGE‡	THRESHOLD VOLTAGE‡	OUTPUT	DISCHARGE SWITCH
<MIN	Irrelevant	Irrelevant	L	On
>MAX	<MIN	Irrelevant	H	Off
>MAX	>MAX	>MAX	L	On
>MAX	>MAX	<MIN	As previously established	

‡ For conditions shown as MIN or MAX, use the appropriate value specified under electrical characteristics.

functional block diagram

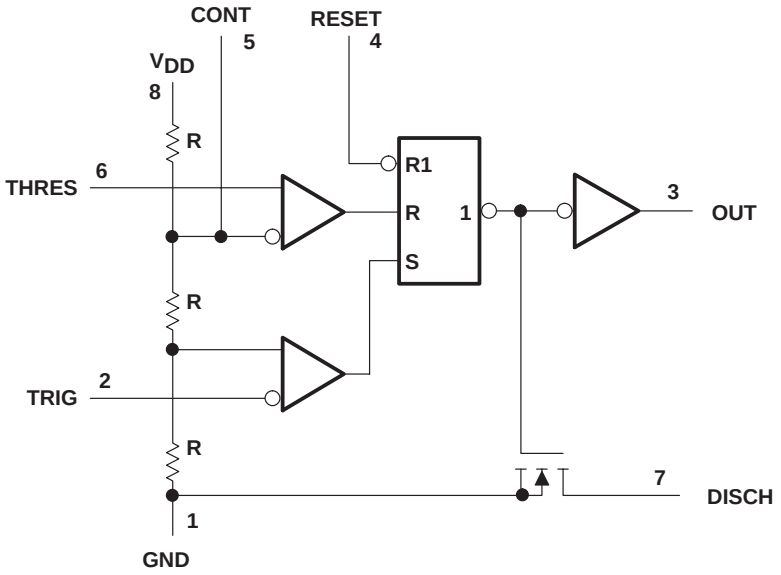

Pin numbers are for all packages except the FK package. RESET can override TRIG, which can override THRES.

equivalent schematic (each channel)

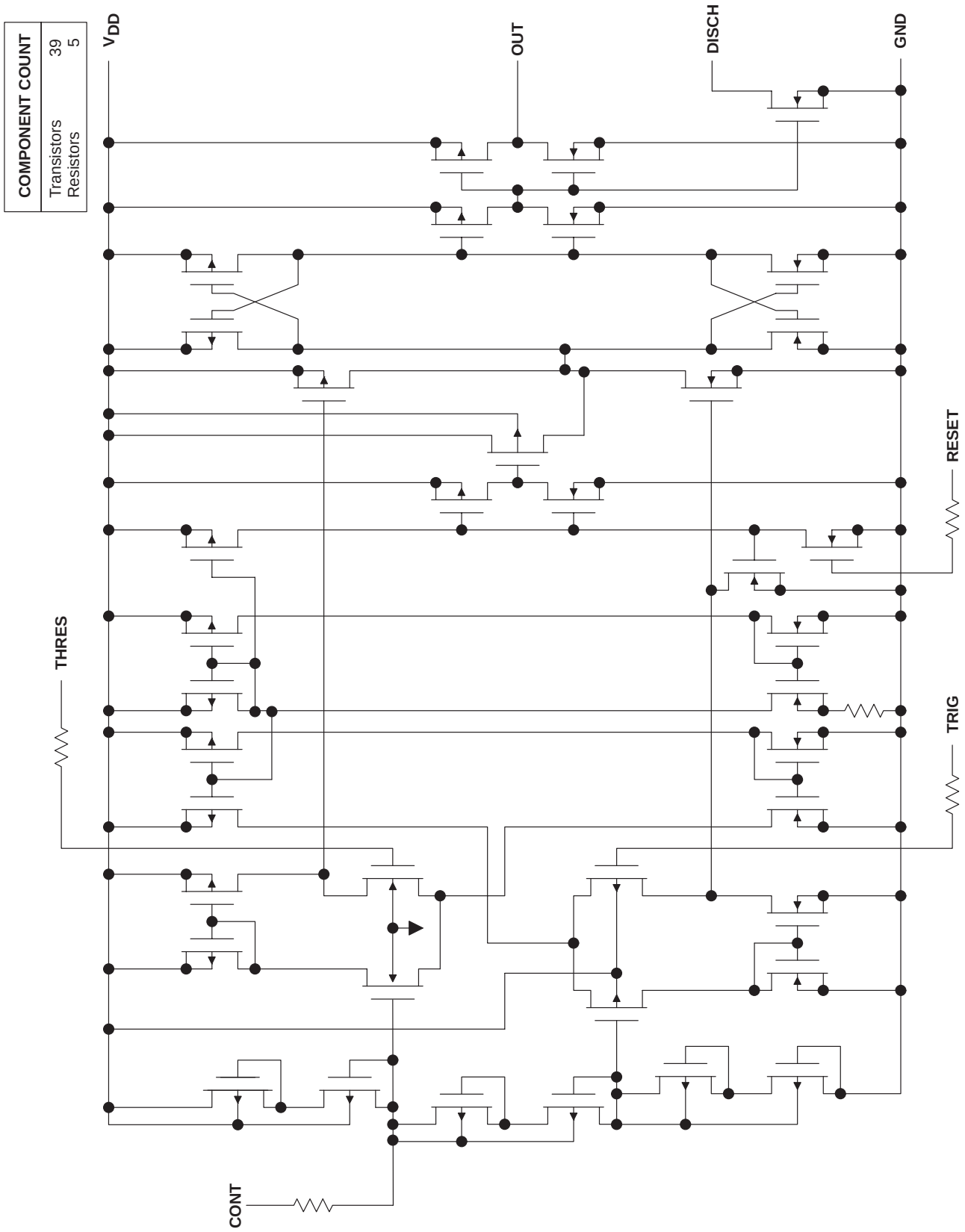

absolute maximum ratings over operating free-air temperature range (unless otherwise noted)†

Supply voltage, V_{DD} (see Note 1) . . . . . 18 V
Input voltage range, V_I (any input) . . . . . −0.3 to V_{DD}
Sink current, discharge or output . . . . . 150 mA
Source current, output, I_O . . . . . 15 mA
Continuous total power dissipation . . . . . See Dissipation Rating Table
Operating free-air temperature range, T_A: C-suffix . . . . . 0°C to 70°C
I-suffix . . . . . −40°C to 85°C
Q-suffix . . . . . −40°C to 125°C
M-suffix . . . . . −55°C to 125°C
Storage temperature range . . . . . −65°C to 150°C
Case temperature for 60 seconds: FK package . . . . . 260°C
Lead temperature 1,6 mm (1/16 inch) from case for 60 seconds: JG package . . . . . 300°C
Lead temperature 1,6 mm (1/16 inch) from case for 10 seconds: D, DB, P, or PW package . . . . . 260°C

† Stresses beyond those listed under “absolute maximum ratings” may cause permanent damage to the device. These are stress ratings only and functional operation of the device at these or any other conditions beyond those indicated under “recommended operating conditions” is not implied. Exposure to absolute-maximum-rated conditions for extended periods may affect device reliability.

NOTE 1: All voltage values are with respect to network GND.

DISSIPATION RATING TABLE

PACKAGE	$T_A \le 25°C$ POWER RATING	DERATING FACTOR ABOVE $T_A = 25°C$	$T_A = 70°C$ POWER RATING	$T_A = 85°C$ POWER RATING	$T_A = 125°C$ POWER RATING
D	725 mW	5.8 mW/°C	464 mW	377 mW	145 mW
DB	525 mW	4.2 mW/°C	336 mW	273 mW	105 mW
FK	1375 mW	11.0 mW/°C	880 mW	715 mW	275 mW
JG	1050 mW	8.4 mW/°C	672 mW	546 mW	210 mW
P	1000 mW	8.0 mW/°C	640 mW	520 mW	200 mW
PW	525 mW	4.2 mW/°C	336 mW	273 mW	105 mW

recommended operating conditions

		MIN	MAX	UNIT
Supply voltage, V_{DD}		2	15	V
Operating free-air temperature range, T_A	TLC555C	0	70	°C
	TLC555I	−40	85	
	TLC555Q	−40	125	
	TLC555M	−55	125	

electrical characteristics at specified free-air temperature, V_{DD} = 2 V for TLC555C, V_{DD} = 3 V for TLC555I

PARAMETER		TEST CONDITIONS	T_A†	TLC555C			TLC555I			UNIT
				MIN	TYP	MAX	MIN	TYP	MAX	
V_{IT}	Threshold voltage		25°C	0.95	1.33	1.65	1.6		2.4	V
			Full range	0.85		1.75	1.5		2.5	
I_{IT}	Threshold current		25°C		10			10		pA
			MAX		75			150		
$V_{I(TRIG)}$	Trigger voltage		25°C	0.4	0.67	0.95	0.71	1	1.29	V
			Full range	0.3		1.05	0.61		1.39	
$I_{I(TRIG)}$	Trigger current		25°C		10			10		pA
			MAX		75			150		
$V_{I(RESET)}$	Reset voltage		25°C	0.4	1.1	1.5	0.4	1.1	1.5	V
			Full range	0.3		2	0.3		1.8	
$I_{I(RESET)}$	Reset current		25°C		10			10		pA
			MAX		75			150		
	Control voltage (open circuit) as a percentage of supply voltage		MAX		66.7%			66.7%		
	Discharge switch on-stage voltage	I_{OL} = 1 mA	25°C		0.03	0.2		0.03	0.2	V
			Full range			0.25			0.375	
	Discharge switch off-stage current		25°C		0.1			0.1		nA
			MAX		0.5			120		
V_{OH}	High-level output voltage	I_{OH} = −300 µA	25°C	1.5	1.9		2.5	2.85		V
			Full range	1.5			2.5			
V_{OL}	Low-level output voltage	I_{OL} = 1 mA	25°C		0.07	0.3		0.07	0.3	V
			Full range			0.35			0.4	
I_{DD}	Supply current	See Note 2	25°C			250			250	µA
			Full range			400			500	

† Full range is 0°C to 70°C for the TLC555C and −40°C to 85°C for the TLC555I. For conditions shown as MAX, use the appropriate value specified in the recommended operating conditions table.

NOTE 2: These values apply for the expected operating configurations in which THRES is connected directly to DISCH or to TRIG.

electrical characteristics at specified free-air temperature, V_{DD} = 5 V

PARAMETER		TEST CONDITIONS	T_A†	TLC555C			TLC555I			TLC555Q, TLC555M			UNIT
				MIN	TYP	MAX	MIN	TYP	MAX	MIN	TYP	MAX	
V_{IT}	Threshold voltage		25°C	2.8	3.3	3.8	2.8	3.3	3.8	2.8	3.3	3.8	V
			Full range	2.7		3.9	2.7		3.9	2.7		3.9	
I_{IT}	Threshold current		25°C		10			10			10		pA
			MAX		75			150			5000		
$V_{I(TRIG)}$	Trigger voltage		25°C	1.36	1.66	1.96	1.36	1.66	1.96	1.36	1.66	1.96	V
			Full range	1.26		2.06	1.26		2.06	1.26		2.06	
$I_{I(TRIG)}$	Trigger current		25°C		10			10			10		pA
			MAX		75			150			5000		
$V_{I(RESET)}$	Reset voltage		25°C	0.4	1.1	1.5	0.4	1.1	1.5	0.4	1.1	1.5	V
			Full range	0.3		1.8	0.3		1.8	0.3		1.8	
$I_{I(RESET)}$	Reset current		25°C		10			10			10		pA
			MAX		75			150			5000		
	Control voltage (open circuit) as a percentage of supply voltage		MAX		66.7%			66.7%			66.7%		
	Discharge switch on-state voltage	I_{OL} = 10 mA	25°C		0.14	0.5		0.14	0.5		0.14	0.5	V
			Full range			0.6			0.6			0.6	
	Discharge switch off-state current		25°C		0.1			0.1			0.1		nA
			MAX		0.5			120			120		
V_{OH}	High-level output voltage	I_{OH} = − 1 mA	25°C	4.1	4.8		4.1	4.8		4.1	4.8		V
			Full range	4.1			4.1			4.1			
V_{OL}	Low-level output voltage	I_{OL} = 8 mA	25°C		0.21	0.4		0.21	0.4		0.21	0.4	V
			Full range			0.5			0.5			0.6	
		I_{OL} = 5 mA	25°C		0.13	0.3		0.13	0.3		0.13	0.3	
			Full range			0.4			0.4			0.45	
		I_{OL} = 3.2 mA	25°C		0.08	0.3		0.08	0.3		0.08	0.3	
			Full range			0.35			0.35			0.4	
I_{DD}	Supply current	See Note 2	25°C		170	350		170	350		170	350	µA
			Full range			500			600			700	

† Full range is 0°C to 70°C the for TLC555C, −40°C to 85°C for the TLC555I, −40°C to 125°C for the TLC555Q, and −55°C to 125°C for the TLC555M. For conditions shown as MAX, use the appropriate value specified in the recommended operating conditions table.

NOTE 2: These values apply for the expected operating configurations in which THRES is connected directly to DISCH or TRIG.

electrical characteristics at specified free-air temperature, V_{DD} = 15 V

PARAMETER		TEST CONDITIONS	T_A†	TLC555C			TLC555I			TLC555Q, TLC555M			UNIT
				MIN	TYP	MAX	MIN	TYP	MAX	MIN	TYP	MAX	
V_{IT}	Threshold voltage		25°C	9.45	10	10.55	9.45	10	10.55	9.45	10	10.55	V
			Full range	9.35		10.65	9.35		10.65	9.35		10.65	
I_{IT}	Threshold current		25°C		10			10			10		pA
			MAX		75			150			5000		
$V_{I(TRIG)}$	Trigger voltage		25°C	4.65	5	5.35	4.65	5	5.35	4.65	5	5.35	V
			Full range	4.55		5.45	4.55		5.45	4.55		5.45	
$I_{I(TRIG)}$	Trigger current		25°C		10			10			10		pA
			MAX		75			150			5000		
$V_{I(RESET)}$	Reset voltage		25°C	0.4	1.1	1.5	0.4	1.1	1.5	0.4	1.1	1.5	V
			Full range	0.3		1.8	0.3		1.8	0.3		1.8	
$I_{I(RESET)}$	Reset current		25°C		10			10			10		pA
			MAX		75			150			5000		
	Control voltage (open circuit) as a percentage of supply voltage		MAX		66.7%			66.7%			66.7%		
	Discharge switch on-state voltage	I_{OL} = 100 mA	25°C		0.77	1.7		0.77	1.7		0.77	1.7	V
			Full range			1.8			1.8			1.8	
	Discharge switch off-state current		25°C		0.1			0.1			0.1		nA
			MAX		0.5			120			120		
V_{OH}	High-level output voltage	I_{OH} = − 10 mA	25°C	12.5	14.2		12.5	14.2		12.5	14.2		V
			Full range	12.5			12.5			12.5			
		I_{OH} = − 5 mA	25°C	13.5	14.6		13.5	14.6		13.5	14.6		
			Full range	13.5			13.5			13.5			
		I_{OH} = − 1 mA	25°C	14.2	14.9		14.2	14.9		14.2	14.9		
			Full range	14.2			14.2			14.2			
V_{OL}	Low-level output voltage	I_{OL} = 100 mA	25°C		1.28	3.2		1.28	3.2		1.28	3.2	V
			Full range			3.6			3.7			3.8	
		I_{OL} = 50 mA	25°C		0.63	1		0.63	1		0.63	1	
			Full range			1.3			1.4			1.5	
		I_{OL} = 10 mA	25°C		0.12	0.3		0.12	0.3		0.12	0.3	
			Full range			0.4			0.4			0.45	
I_{DD}	Supply current	See Note 2	25°C		360	600		360	600		360	600	µA
			Full range			800			900			1000	

† Full range is 0°C to 70°C for TLC555C, −40°C to 85°C for TLC555I, −40°C to 125°C for the TLC555Q, and −55°C to 125°C for TLC555M. For conditions shown as MAX, use the appropriate value specified in the recommended operating conditions table.

NOTE 2: These values apply for the expected operating configurations in which THRES is connected directly to DISCH or TRIG.

operating characteristics, V_{DD} = 5 V, T_A = 25°C (unless otherwise noted)

PARAMETER		TEST CONDITIONS		MIN	TYP	MAX	UNIT
	Initial error of timing interval‡	V_{DD} = 5 V to 15 V, C_T = 0.1 µF,	R_A = R_B = 1 kΩ to 100 kΩ, See Note 3		1%	3%	
	Supply voltage sensitivity of timing interval				0.1	0.5	%/V
t_r	Output pulse rise time	R_L = 10 MΩ,	C_L = 10 pF		20	75	ns
t_f	Output pulse fall time				15	60	
f_{max}	Maximum frequency in astable mode	R_A = 470 Ω, C_T = 200 pF,	R_B = 200 Ω, See Note 3	1.2	2.1		MHz

‡ Timing interval error is defined as the difference between the measured value and the average value of a random sample from each process run.

NOTE 3: R_A, R_B, and C_T are as defined in Figure 1.

electrical characteristics at V_{DD} = 5 V, T_A = 25°C

PARAMETER		TEST CONDITIONS	MIN	TYP	MAX	UNIT
V_{IT}	Threshold voltage		2.8	3.3	3.8	V
I_{IT}	Threshold current			10		pA
$V_{I(TRIG)}$	Trigger voltage		1.36	1.66	1.96	V
$I_{I(TRIG)}$	Trigger current			10		pA
$V_{I(RESET)}$	Reset voltage		0.4	1.1	1.5	V
$I_{I(RESET)}$	Reset current			10		pA
	Control voltage (open circuit) as a percentage of supply voltage			66.7%		
	Discharge switch on-state voltage	I_{OL} = 10 mA		0.14	0.5	V
	Discharge switch off-state current			0.1		nA
V_{OH}	High-level output voltage	I_{OH} = − 1 mA	4.1	4.8		V
V_{OL}	Low-level output voltage	I_{OL} = 8 mA		0.21	0.4	V
		I_{OL} = 5 mA		0.13	0.3	
		I_{OL} = 3.2 mA		0.08	0.3	
I_{DD}	Supply current	See Note 2		170	350	µA

NOTE 2: These values apply for the expected operating configurations in which THRES is connected directly to DISCH or TRIG.

TYPICAL CHARACTERISTICS

DISCHARGE SWITCH ON-STATE RESISTANCE vs FREE-AIR TEMPERATURE

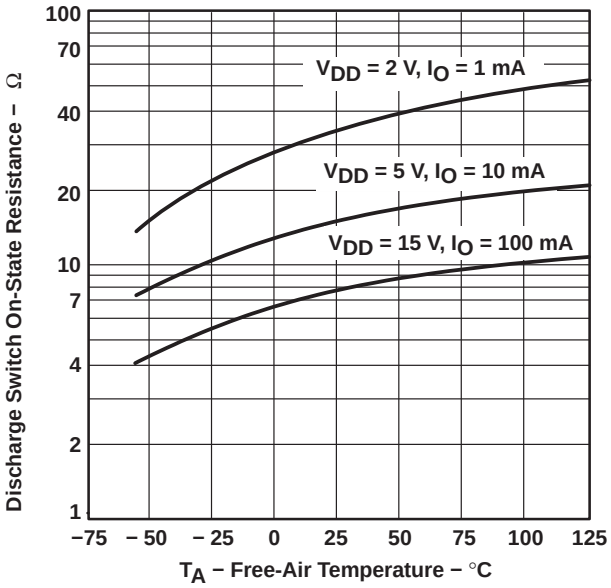

Figure 1

PROPAGATION DELAY TIMES TO DISCHARGE OUTPUT FROM TRIGGER AND THRESHOLD SHORTED TOGETHER vs SUPPLY VOLTAGE

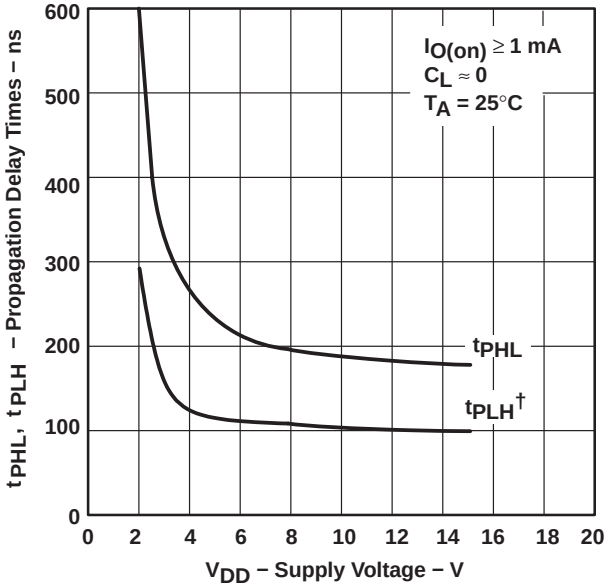

† The effects of the load resistance on these values must be taken into account separately.

Figure 2

APPLICATION INFORMATION

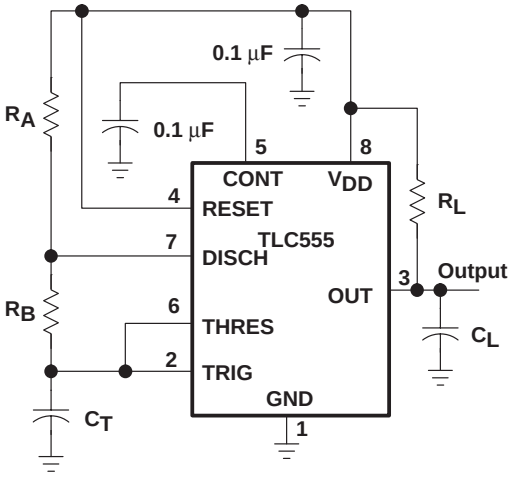

Pin numbers shown are for all packages except the FK package.

CIRCUIT

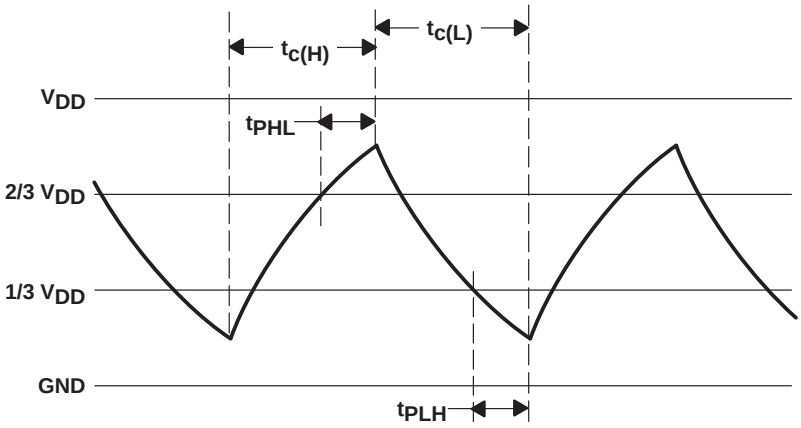

TRIGGER AND THRESHOLD VOLTAGE WAVEFORM

Figure 3. Astable Operation

APPLICATION INFORMATION

Connecting TRIG to THRES, as shown in Figure 3, causes the timer to run as a multivibrator. The capacitor C_T charges through R_A and R_B to the threshold voltage level (approximately 0.67 V_{DD}) and then discharges through R_B only to the value of the trigger voltage level (approximately 0.33 V_{DD}). The output is high during the charging cycle ($t_{c(H)}$) and low during the discharge cycle ($t_{c(L)}$). The duty cycle is controlled by the values of R_A, R_B, and C_T as shown in the equations below.

$$t_{c(H)} \approx C_T (R_A + R_B) \ln 2 \quad (\ln 2 = 0.693)$$

$$t_{c(L)} \approx C_T R_B \ln 2$$

$$\text{Period} = t_{c(H)} + t_{c(L)} \approx C_T (R_A + 2R_B) \ln 2$$

$$\text{Output driver duty cycle} = \frac{t_{c(L)}}{t_{c(H)} + t_{c(L)}} \approx 1 - \frac{R_B}{R_A + 2R_B}$$

$$\text{Output waveform duty cycle} = \frac{t_{c(H)}}{t_{c(H)} + t_{c(L)}} \approx \frac{R_B}{R_A + 2R_B}$$

The 0.1-µF capacitor at CONT in Figure 3 decreases the period by about 10%.

The formulas shown above do not allow for any propagation delay times from the TRIG and THRES inputs to DISCH. These delay times add directly to the period and create differences between calculated and actual values that increase with frequency. In addition, the internal on-state resistance r_{on} during discharge adds to R_B to provide another source of timing error in the calculation when R_B is very low or r_{on} is very high.

The equations below provide better agreement with measured values.

$$t_{c(H)} = C_T (R_A + R_B) \ln \left[3 - \exp\left(\frac{-t_{PLH}}{C_T (R_B + r_{on})} \right) \right] + t_{PHL}$$

$$t_{c(L)} = C_T (R_B + r_{on}) \ln \left[3 - \exp\left(\frac{-t_{PHL}}{C_T (R_A + R_B)} \right) \right] + t_{PLH}$$

These equations and those given earlier are similar in that a time constant is multiplied by the logarithm of a number or function. The limit values of the logarithmic terms must be between In 2 at low frequencies and In 3 at extremely high frequencies. For a duty cycle close to 50%, an appropriate constant for the logarithmic terms can be substituted with good results. Duty cycles less than 50% $\frac{t_{c(H)}}{t_{c(H)} + t_{c(L)}}$ require that $\frac{t_{c(H)}}{t_{c(L)}} < 1$ and possibly $R_A \le r_{on}$. These conditions can be difficult to obtain.

In monostable applications, the trip point on TRIG can be set by a voltage applied to CONT. An input voltage between 10% and 80% of the supply voltage from a resistor divider with at least 500-µA bias provides good results.

PACKAGING INFORMATION

Orderable Device	Status (1)	Package Type	Package Drawing	Pins	Package Qty	Eco Plan (2)	Lead/ Ball Finish	MSL Peak Temp (3)	Samples (Requires Login)
5962-89503012A	ACTIVE	LCCC	FK	20	1	TBD	POST-PLATE	N / A for Pkg Type	Purchase Samples
5962-8950301PA	ACTIVE	CDIP	JG	8	1	TBD	A42	N / A for Pkg Type	Purchase Samples
TLC555CD	ACTIVE	SOIC	D	8	75	Green (RoHS & no Sb/Br)	CU NIPDAU	Level-1-260C-UNLIM	Purchase Samples
TLC555CDG4	ACTIVE	SOIC	D	8	75	Green (RoHS & no Sb/Br)	CU NIPDAU	Level-1-260C-UNLIM	Purchase Samples
TLC555CDR	ACTIVE	SOIC	D	8	2500	Green (RoHS & no Sb/Br)	CU NIPDAU	Level-1-260C-UNLIM	Request Free Samples
TLC555CDRG4	ACTIVE	SOIC	D	8	2500	Green (RoHS & no Sb/Br)	CU NIPDAU	Level-1-260C-UNLIM	Request Free Samples
TLC555CP	ACTIVE	PDIP	P	8	50	Pb-Free (RoHS)	CU NIPDAU	N / A for Pkg Type	Request Free Samples
TLC555CPE4	ACTIVE	PDIP	P	8	50	Pb-Free (RoHS)	CU NIPDAU	N / A for Pkg Type	Request Free Samples
TLC555CPSR	ACTIVE	SO	PS	8	2000	Green (RoHS & no Sb/Br)	CU NIPDAU	Level-1-260C-UNLIM	Request Free Samples
TLC555CPSRG4	ACTIVE	SO	PS	8	2000	Green (RoHS & no Sb/Br)	CU NIPDAU	Level-1-260C-UNLIM	Request Free Samples
TLC555CPW	ACTIVE	TSSOP	PW	14	90	Green (RoHS & no Sb/Br)	CU NIPDAU	Level-1-260C-UNLIM	Contact TI Distributor or Sales Office
TLC555CPWG4	ACTIVE	TSSOP	PW	14	90	Green (RoHS & no Sb/Br)	CU NIPDAU	Level-1-260C-UNLIM	Contact TI Distributor or Sales Office
TLC555CPWR	ACTIVE	TSSOP	PW	14	2000	Green (RoHS & no Sb/Br)	CU NIPDAU	Level-1-260C-UNLIM	Request Free Samples
TLC555CPWRG4	ACTIVE	TSSOP	PW	14	2000	Green (RoHS & no Sb/Br)	CU NIPDAU	Level-1-260C-UNLIM	Request Free Samples
TLC555ID	ACTIVE	SOIC	D	8	75	Green (RoHS & no Sb/Br)	CU NIPDAU	Level-1-260C-UNLIM	Purchase Samples
TLC555IDG4	ACTIVE	SOIC	D	8	75	Green (RoHS & no Sb/Br)	CU NIPDAU	Level-1-260C-UNLIM	Purchase Samples
TLC555IDR	ACTIVE	SOIC	D	8	2500	Green (RoHS & no Sb/Br)	CU NIPDAU	Level-1-260C-UNLIM	Purchase Samples
TLC555IDRG4	ACTIVE	SOIC	D	8	2500	Green (RoHS & no Sb/Br)	CU NIPDAU	Level-1-260C-UNLIM	Purchase Samples
TLC555IP	ACTIVE	PDIP	P	8	50	Pb-Free (RoHS)	CU NIPDAU	N / A for Pkg Type	Request Free Samples

Orderable Device	Status [1]	Package Type	Package Drawing	Pins	Package Qty	Eco Plan [2]	Lead/ Ball Finish	MSL Peak Temp [3]	Samples (Requires Login)
TLC555IPE4	ACTIVE	PDIP	P	8	50	Pb-Free (RoHS)	CU NIPDAU	N / A for Pkg Type	Request Free Samples
TLC555MFKB	ACTIVE	LCCC	FK	20	1	TBD	POST-PLATE	N / A for Pkg Type	Purchase Samples
TLC555MJG	ACTIVE	CDIP	JG	8	1	TBD	A42	N / A for Pkg Type	Purchase Samples
TLC555MJGB	ACTIVE	CDIP	JG	8	1	TBD	A42	N / A for Pkg Type	Purchase Samples
TLC555MP	OBSOLETE	PDIP	P	8		TBD	Call TI	Call TI	Samples Not Available
TLC555QDR	ACTIVE	SOIC	D	8	2500	TBD	CU NIPDAU	Level-1-220C-UNLIM	Request Free Samples
TLC555QDRG4	ACTIVE	SOIC	D	8	2500	Green (RoHS & no Sb/Br)	CU NIPDAU	Level-1-260C-UNLIM	Purchase Samples

[1] The marketing status values are defined as follows:
ACTIVE: Product device recommended for new designs.
LIFEBUY: TI has announced that the device will be discontinued, and a lifetime-buy period is in effect.
NRND: Not recommended for new designs. Device is in production to support existing customers, but TI does not recommend using this part in a new design.
PREVIEW: Device has been announced but is not in production. Samples may or may not be available.
OBSOLETE: TI has discontinued the production of the device.

[2] Eco Plan - The planned eco-friendly classification: Pb-Free (RoHS), Pb-Free (RoHS Exempt), or Green (RoHS & no Sb/Br) - please check http://www.ti.com/productcontent for the latest availability information and additional product content details.
TBD: The Pb-Free/Green conversion plan has not been defined.
Pb-Free (RoHS): TI's terms "Lead-Free" or "Pb-Free" mean semiconductor products that are compatible with the current RoHS requirements for all 6 substances, including the requirement that lead not exceed 0.1% by weight in homogeneous materials. Where designed to be soldered at high temperatures, TI Pb-Free products are suitable for use in specified lead-free processes.
Pb-Free (RoHS Exempt): This component has a RoHS exemption for either 1) lead-based flip-chip solder bumps used between the die and package, or 2) lead-based die adhesive used between the die and leadframe. The component is otherwise considered Pb-Free (RoHS compatible) as defined above.
Green (RoHS & no Sb/Br): TI defines "Green" to mean Pb-Free (RoHS compatible), and free of Bromine (Br) and Antimony (Sb) based flame retardants (Br or Sb do not exceed 0.1% by weight in homogeneous material)

[3] MSL, Peak Temp. -- The Moisture Sensitivity Level rating according to the JEDEC industry standard classifications, and peak solder temperature.

Important Information and Disclaimer: The information provided on this page represents TI's knowledge and belief as of the date that it is provided. TI bases its knowledge and belief on information provided by third parties, and makes no representation or warranty as to the accuracy of such information. Efforts are underway to better integrate information from third parties. TI has taken and continues to take reasonable steps to provide representative and accurate information but may not have conducted destructive testing or chemical analysis on incoming materials and chemicals. TI and TI suppliers consider certain information to be proprietary, and thus CAS numbers and other limited information may not be available for release.

In no event shall TI's liability arising out of such information exceed the total purchase price of the TI part(s) at issue in this document sold by TI to Customer on an annual basis.

OTHER QUALIFIED VERSIONS OF TLC555, TLC555M :

- Catalog: TLC555
- Automotive: TLC555-Q1, TLC555-Q1
- Military: TLC555M

NOTE: Qualified Version Definitions:

- Catalog - TI's standard catalog product
- Automotive - Q100 devices qualified for high-reliability automotive applications targeting zero defects
- Military - QML certified for Military and Defense Applications

TAPE AND REEL INFORMATION

REEL DIMENSIONS

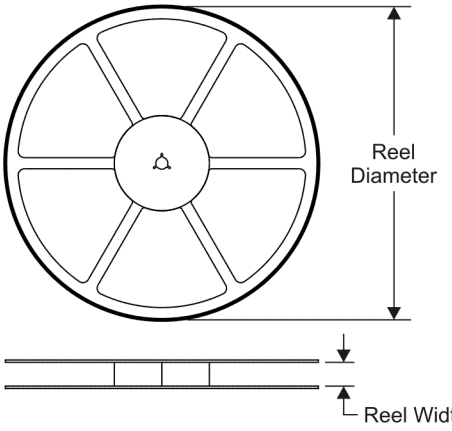

TAPE DIMENSIONS

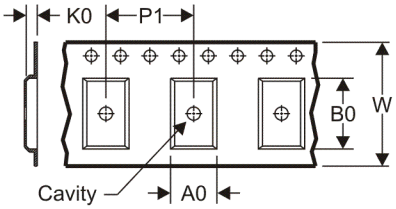

A0	Dimension designed to accommodate the component width
B0	Dimension designed to accommodate the component length
K0	Dimension designed to accommodate the component thickness
W	Overall width of the carrier tape
P1	Pitch between successive cavity centers

QUADRANT ASSIGNMENTS FOR PIN 1 ORIENTATION IN TAPE

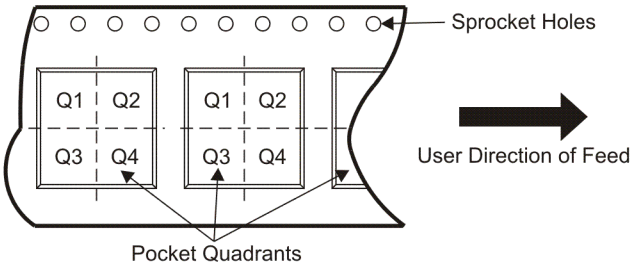

*All dimensions are nominal

Device	Package Type	Package Drawing	Pins	SPQ	Reel Diameter (mm)	Reel Width W1 (mm)	A0 (mm)	B0 (mm)	K0 (mm)	P1 (mm)	W (mm)	Pin1 Quadrant
TLC555CDR	SOIC	D	8	2500	330.0	12.4	6.4	5.2	2.1	8.0	12.0	Q1
TLC555CPSR	SO	PS	8	2000	330.0	16.4	8.2	6.6	2.5	12.0	16.0	Q1
TLC555CPWR	TSSOP	PW	14	2000	330.0	12.4	6.9	5.6	1.6	8.0	12.0	Q1
TLC555IDR	SOIC	D	8	2500	330.0	12.4	6.4	5.2	2.1	8.0	12.0	Q1
TLC555QDR	SOIC	D	8	2500	330.0	12.4	6.4	5.2	2.1	8.0	12.0	Q1

TAPE AND REEL BOX DIMENSIONS

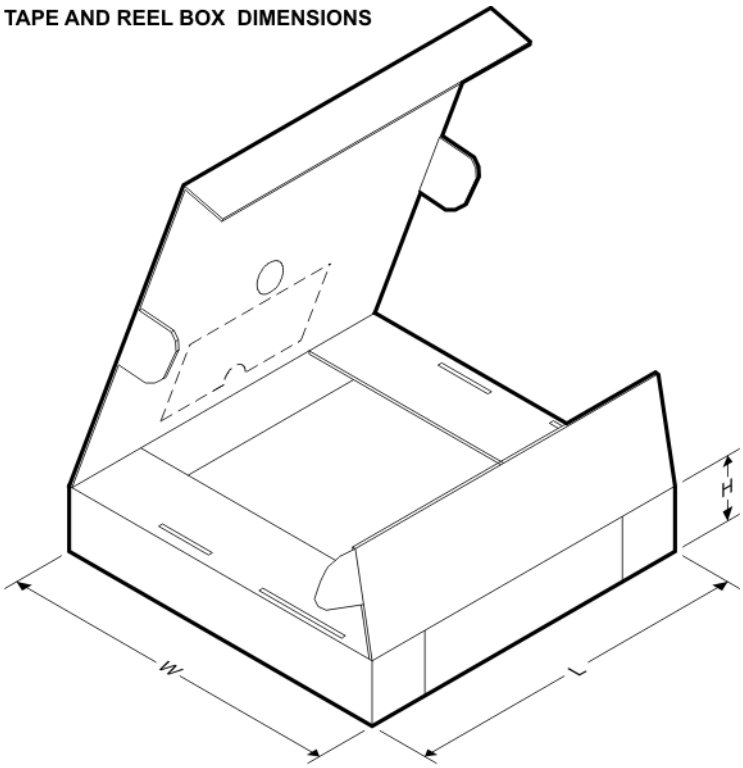

*All dimensions are nominal

Device	Package Type	Package Drawing	Pins	SPQ	Length (mm)	Width (mm)	Height (mm)
TLC555CDR	SOIC	D	8	2500	340.5	338.1	20.6
TLC555CPSR	SO	PS	8	2000	346.0	346.0	33.0
TLC555CPWR	TSSOP	PW	14	2000	346.0	346.0	29.0
TLC555IDR	SOIC	D	8	2500	340.5	338.1	20.6
TLC555QDR	SOIC	D	8	2500	346.0	346.0	29.0

JG (R-GDIP-T8) **CERAMIC DUAL-IN-LINE**

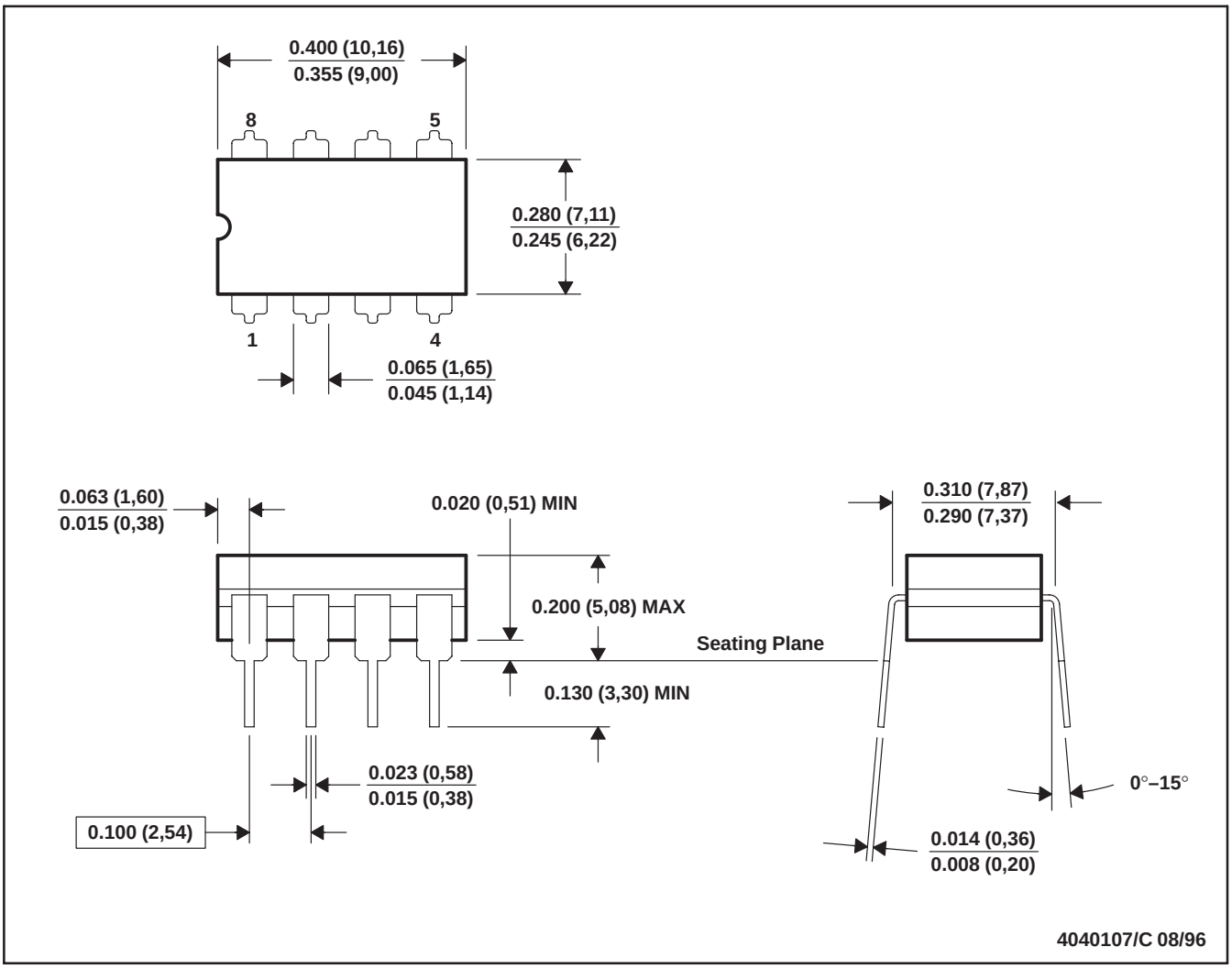

NOTES: A. All linear dimensions are in inches (millimeters).
B. This drawing is subject to change without notice.
C. This package can be hermetically sealed with a ceramic lid using glass frit.
D. Index point is provided on cap for terminal identification.
E. Falls within MIL STD 1835 GDIP1-T8

FK (S-CQCC-N**)

LEADLESS CERAMIC CHIP CARRIER

28 TERMINAL SHOWN

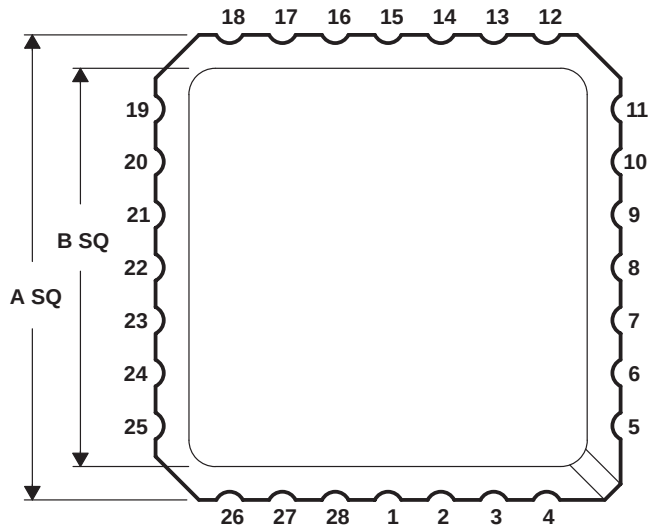

NO. OF TERMINALS **	A		B	
	MIN	MAX	MIN	MAX
20	0.342 (8,69)	0.358 (9,09)	0.307 (7,80)	0.358 (9,09)
28	0.442 (11,23)	0.458 (11,63)	0.406 (10,31)	0.458 (11,63)
44	0.640 (16,26)	0.660 (16,76)	0.495 (12,58)	0.560 (14,22)
52	0.739 (18,78)	0.761 (19,32)	0.495 (12,58)	0.560 (14,22)
68	0.938 (23,83)	0.962 (24,43)	0.850 (21,6)	0.858 (21,8)
84	1.141 (28,99)	1.165 (29,59)	1.047 (26,6)	1.063 (27,0)

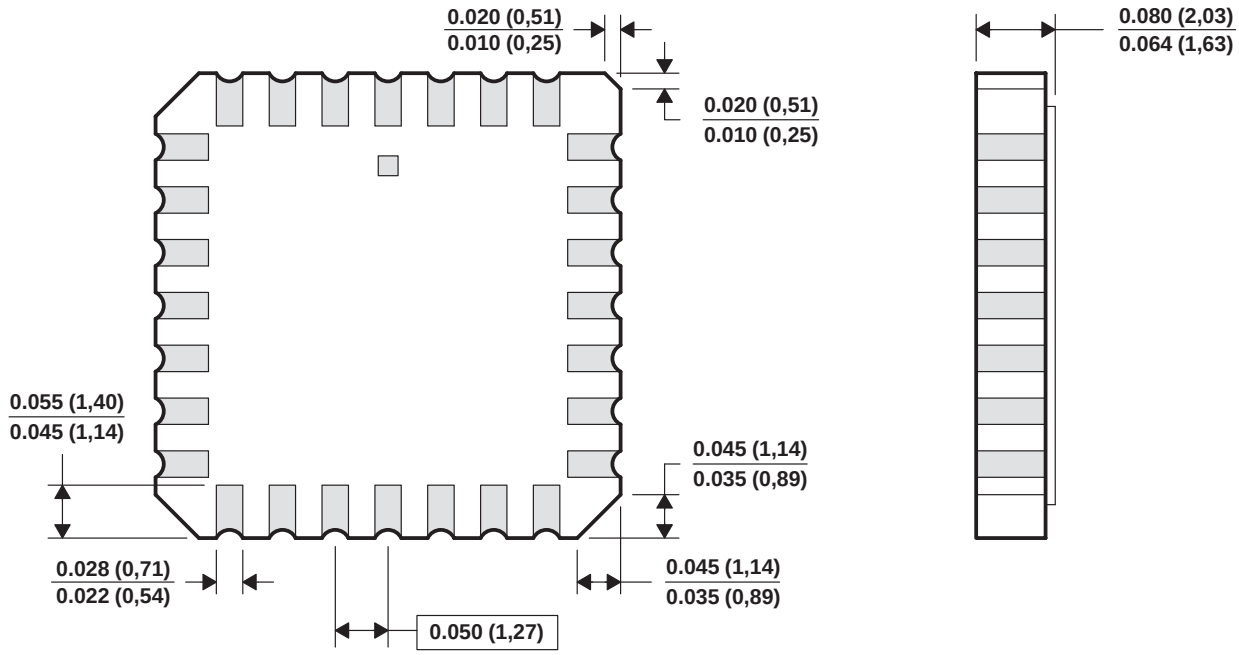

4040140/D 10/96

NOTES:
A. All linear dimensions are in inches (millimeters).
B. This drawing is subject to change without notice.
C. This package can be hermetically sealed with a metal lid.
D. The terminals are gold plated.
E. Falls within JEDEC MS-004

P (R–PDIP–T8) PLASTIC DUAL–IN–LINE PACKAGE

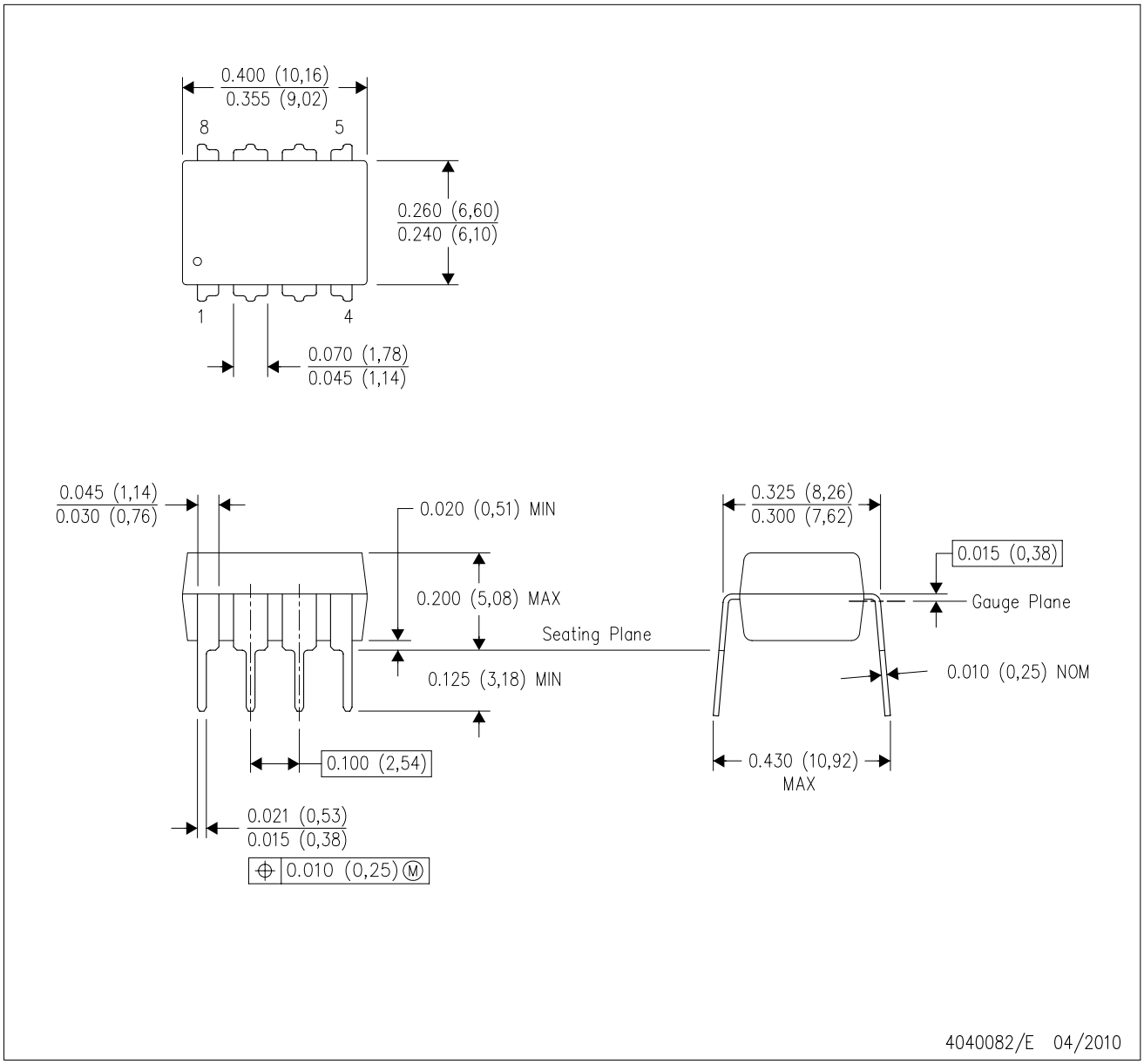

NOTES:
A. All linear dimensions are in inches (millimeters).
B. This drawing is subject to change without notice.
C. Falls within JEDEC MS–001 variation BA.

D (R–PDSO–G8) PLASTIC SMALL–OUTLINE PACKAGE

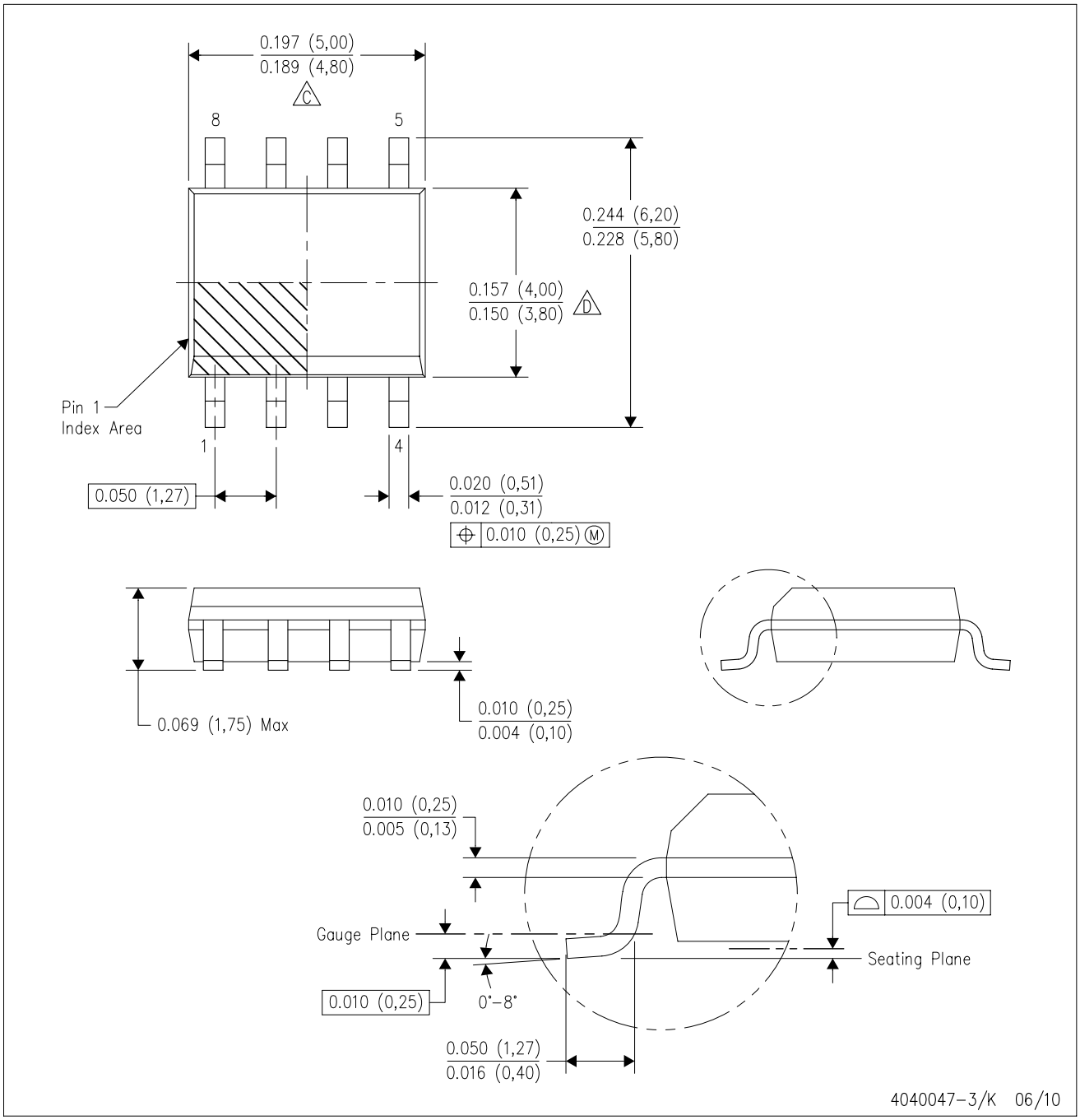

NOTES:
A. All linear dimensions are in inches (millimeters).
B. This drawing is subject to change without notice.
C. Body length does not include mold flash, protrusions, or gate burrs. Mold flash, protrusions, or gate burrs shall not exceed .006 (0,15) per end.
D. Body width does not include interlead flash. Interlead flash shall not exceed .017 (0,43) per side.
E. Reference JEDEC MS–012 variation AA.

D (R–PDSO–G8) PLASTIC SMALL OUTLINE

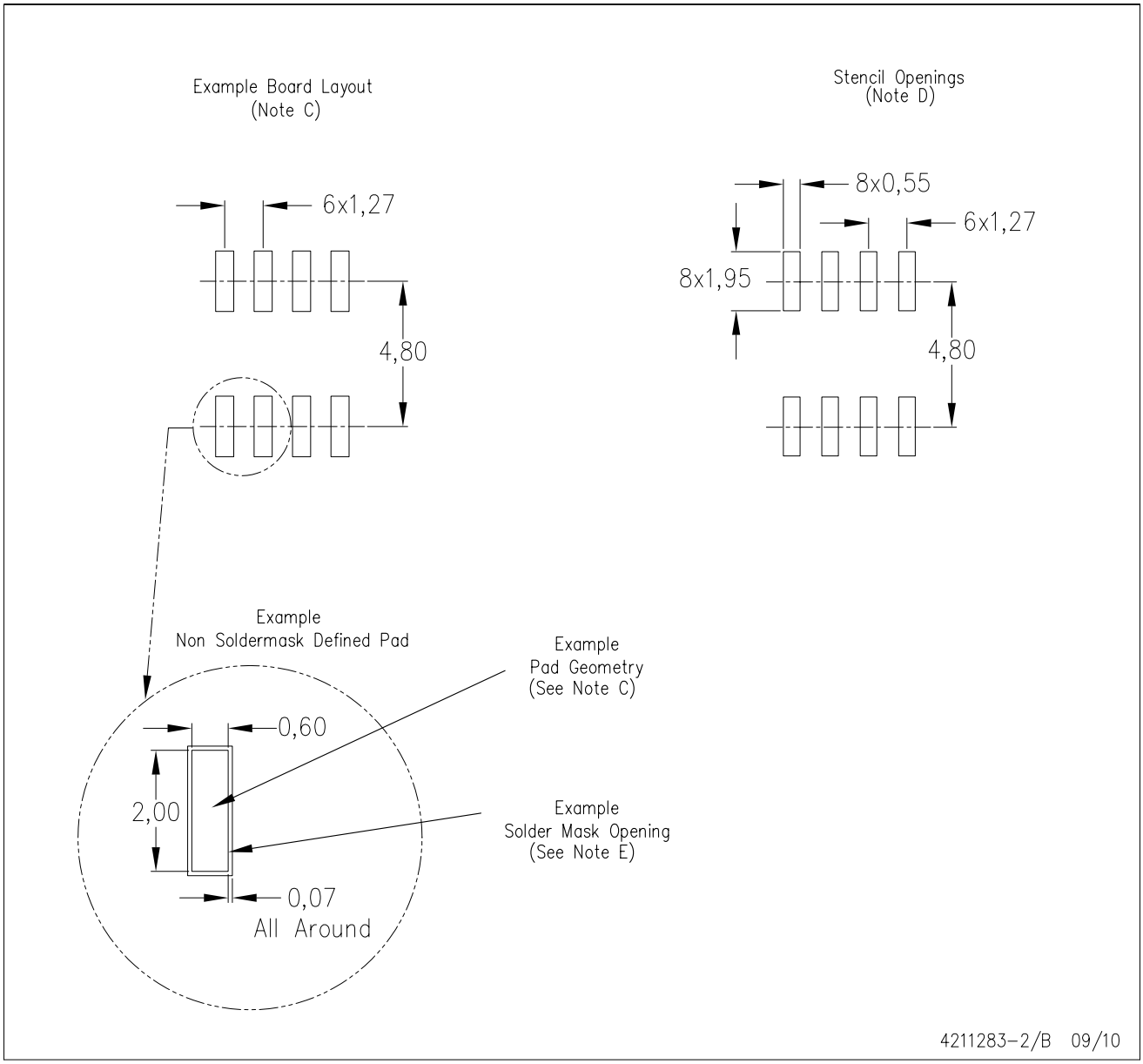

NOTES:
A. All linear dimensions are in millimeters.
B. This drawing is subject to change without notice.
C. Publication IPC–7351 is recommended for alternate designs.
D. Laser cutting apertures with trapezoidal walls and also rounding corners will offer better paste release. Customers should contact their board assembly site for stencil design recommendations. Refer to IPC–7525 for other stencil recommendations.
E. Customers should contact their board fabrication site for solder mask tolerances between and around signal pads.

MECHANICAL DATA

PS (R-PDSO-G8) **PLASTIC SMALL-OUTLINE PACKAGE**

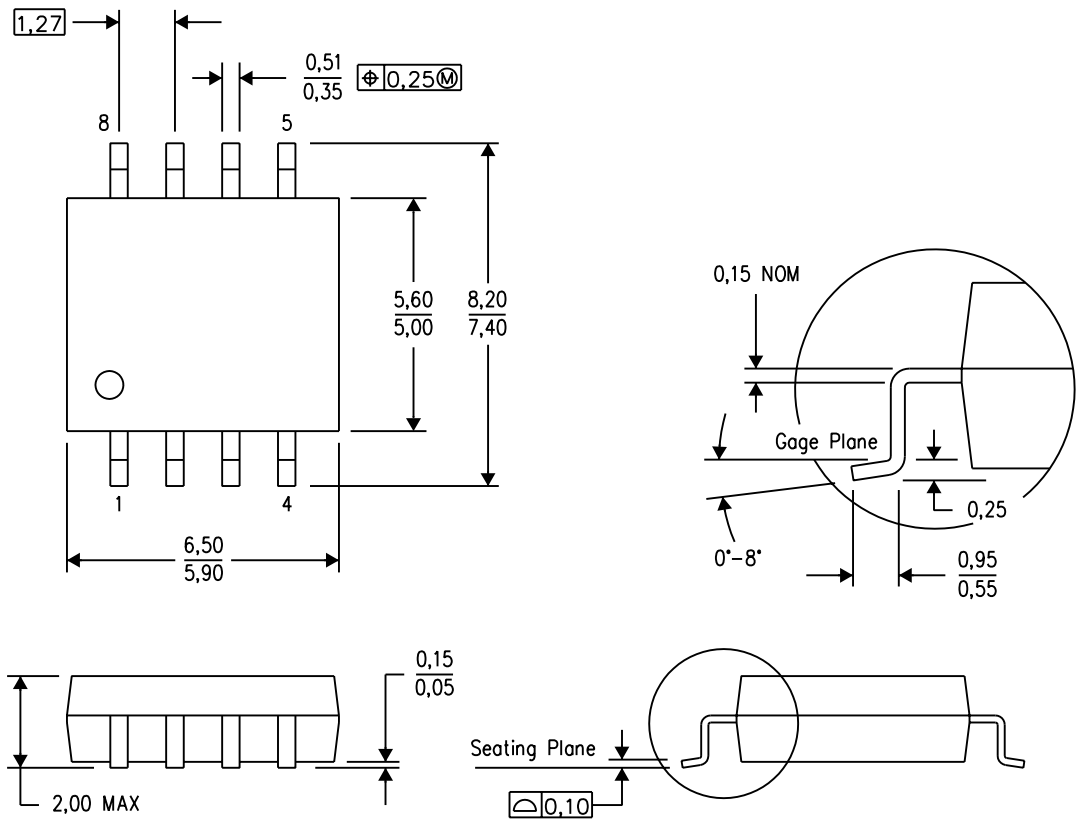

NOTES:
A. All linear dimensions are in millimeters.
B. This drawing is subject to change without notice.
C. Body dimensions do not include mold flash or protrusion, not to exceed 0,15.

PW (R-PDSO-G)** **PLASTIC SMALL-OUTLINE PACKAGE**

14 PINS SHOWN

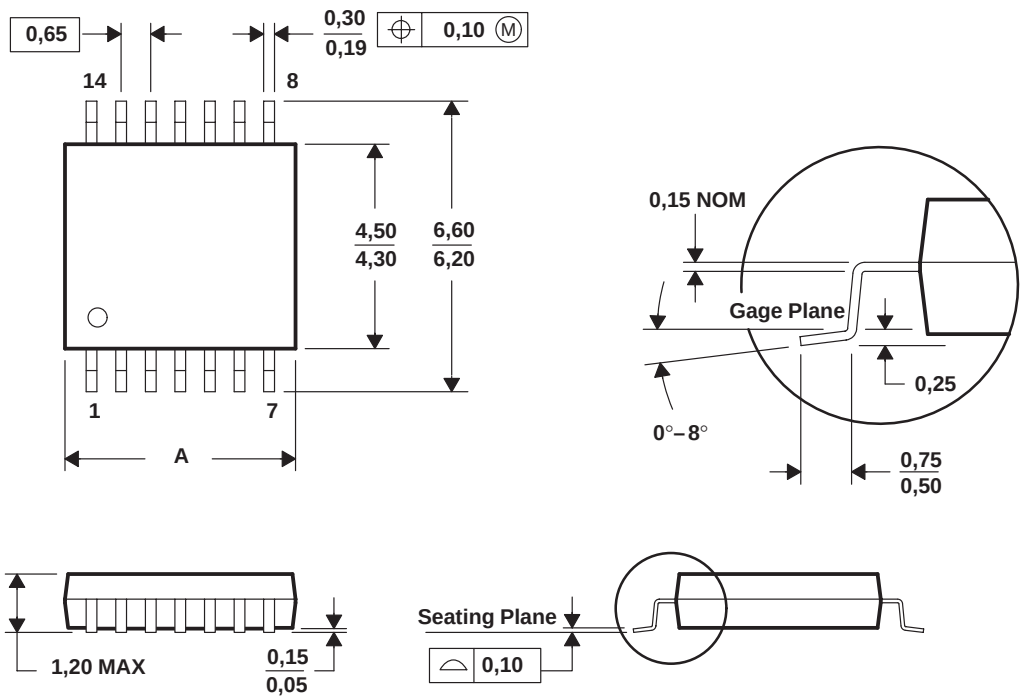

DIM \ PINS **	8	14	16	20	24	28
A MAX	3,10	5,10	5,10	6,60	7,90	9,80
A MIN	2,90	4,90	4,90	6,40	7,70	9,60

4040064/F 01/97

NOTES: A. All linear dimensions are in millimeters.
B. This drawing is subject to change without notice.
C. Body dimensions do not include mold flash or protrusion not to exceed 0,15.
D. Falls within JEDEC MO-153

PW (R–PDSO–G14) PLASTIC SMALL OUTLINE

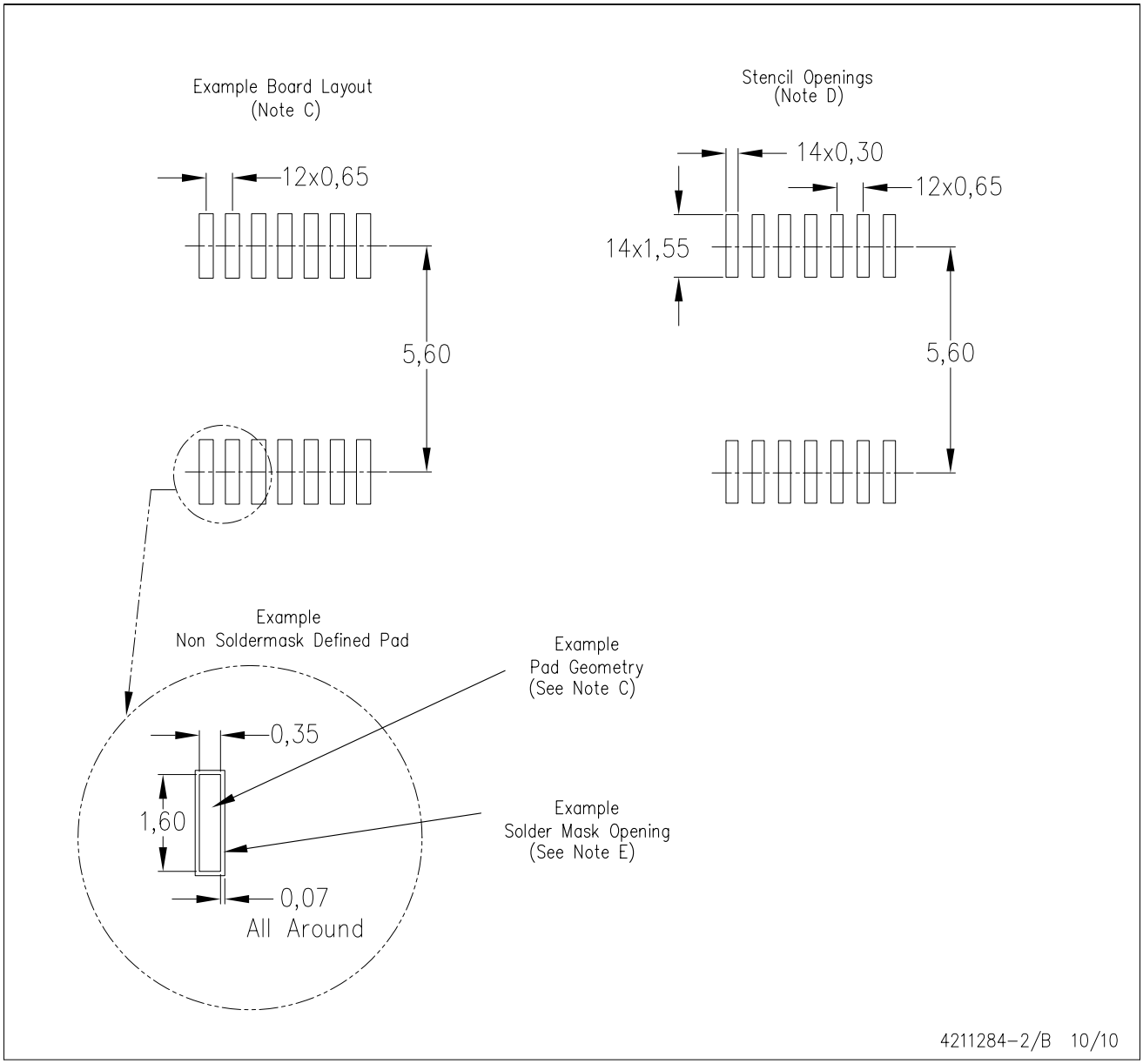

NOTES:
A. All linear dimensions are in millimeters.
B. This drawing is subject to change without notice.
C. Publication IPC–7351 is recommended for alternate designs.
D. Laser cutting apertures with trapezoidal walls and also rounding corners will offer better paste release. Customers should contact their board assembly site for stencil design recommendations. Refer to IPC–7525 for other stencil recommendations.
E. Customers should contact their board fabrication site for solder mask tolerances between and around signal pads.

IMPORTANT NOTICE

Texas Instruments Incorporated and its subsidiaries (TI) reserve the right to make corrections, modifications, enhancements, improvements, and other changes to its products and services at any time and to discontinue any product or service without notice. Customers should obtain the latest relevant information before placing orders and should verify that such information is current and complete. All products are sold subject to TI's terms and conditions of sale supplied at the time of order acknowledgment.

TI warrants performance of its hardware products to the specifications applicable at the time of sale in accordance with TI's standard warranty. Testing and other quality control techniques are used to the extent TI deems necessary to support this warranty. Except where mandated by government requirements, testing of all parameters of each product is not necessarily performed.

TI assumes no liability for applications assistance or customer product design. Customers are responsible for their products and applications using TI components. To minimize the risks associated with customer products and applications, customers should provide adequate design and operating safeguards.

TI does not warrant or represent that any license, either express or implied, is granted under any TI patent right, copyright, mask work right, or other TI intellectual property right relating to any combination, machine, or process in which TI products or services are used. Information published by TI regarding third-party products or services does not constitute a license from TI to use such products or services or a warranty or endorsement thereof. Use of such information may require a license from a third party under the patents or other intellectual property of the third party, or a license from TI under the patents or other intellectual property of TI.

Reproduction of TI information in TI data books or data sheets is permissible only if reproduction is without alteration and is accompanied by all associated warranties, conditions, limitations, and notices. Reproduction of this information with alteration is an unfair and deceptive business practice. TI is not responsible or liable for such altered documentation. Information of third parties may be subject to additional restrictions.

Resale of TI products or services with statements different from or beyond the parameters stated by TI for that product or service voids all express and any implied warranties for the associated TI product or service and is an unfair and deceptive business practice. TI is not responsible or liable for any such statements.

TI products are not authorized for use in safety-critical applications (such as life support) where a failure of the TI product would reasonably be expected to cause severe personal injury or death, unless officers of the parties have executed an agreement specifically governing such use. Buyers represent that they have all necessary expertise in the safety and regulatory ramifications of their applications, and acknowledge and agree that they are solely responsible for all legal, regulatory and safety-related requirements concerning their products and any use of TI products in such safety-critical applications, notwithstanding any applications-related information or support that may be provided by TI. Further, Buyers must fully indemnify TI and its representatives against any damages arising out of the use of TI products in such safety-critical applications.

TI products are neither designed nor intended for use in military/aerospace applications or environments unless the TI products are specifically designated by TI as military-grade or "enhanced plastic." Only products designated by TI as military-grade meet military specifications. Buyers acknowledge and agree that any such use of TI products which TI has not designated as military-grade is solely at the Buyer's risk, and that they are solely responsible for compliance with all legal and regulatory requirements in connection with such use.

TI products are neither designed nor intended for use in automotive applications or environments unless the specific TI products are designated by TI as compliant with ISO/TS 16949 requirements. Buyers acknowledge and agree that, if they use any non-designated products in automotive applications, TI will not be responsible for any failure to meet such requirements.

Following are URLs where you can obtain information on other Texas Instruments products and application solutions:

Products		**Applications**	
Amplifiers	amplifier.ti.com	Audio	www.ti.com/audio
Data Converters	dataconverter.ti.com	Automotive	www.ti.com/automotive
DLP® Products	www.dlp.com	Communications and Telecom	www.ti.com/communications
DSP	dsp.ti.com	Computers and Peripherals	www.ti.com/computers
Clocks and Timers	www.ti.com/clocks	Consumer Electronics	www.ti.com/consumer-apps
Interface	interface.ti.com	Energy	www.ti.com/energy
Logic	logic.ti.com	Industrial	www.ti.com/industrial
Power Mgmt	power.ti.com	Medical	www.ti.com/medical
Microcontrollers	microcontroller.ti.com	Security	www.ti.com/security
RFID	www.ti-rfid.com	Space, Avionics & Defense	www.ti.com/space-avionics-defense
RF/IF and ZigBee® Solutions	www.ti.com/lprf	Video and Imaging	www.ti.com/video
		Wireless	www.ti.com/wireless-apps

Mailing Address: Texas Instruments, Post Office Box 655303, Dallas, Texas 75265
Copyright © 2010, Texas Instruments Incorporated